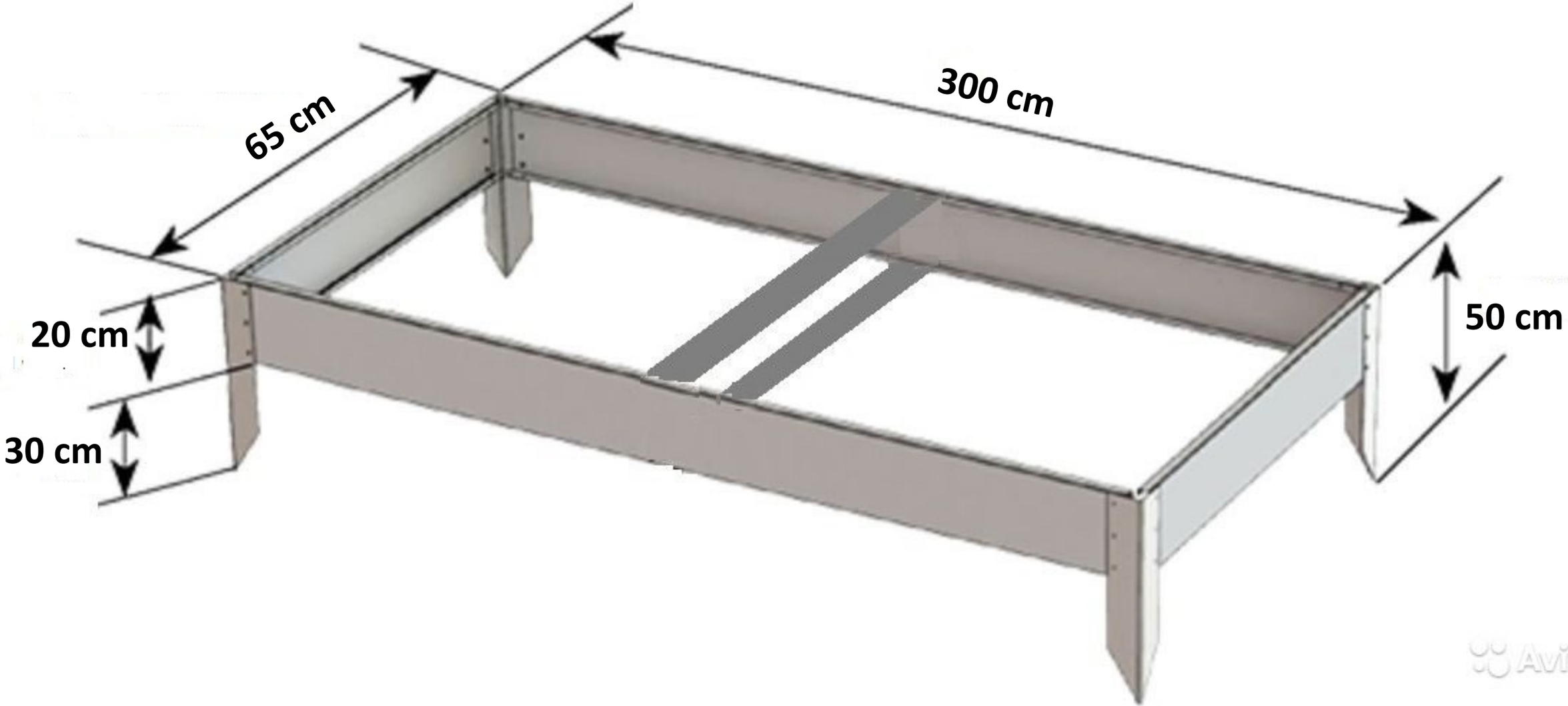
65 cm
300 cm
20 cm
30 cm
50 cm
Avito